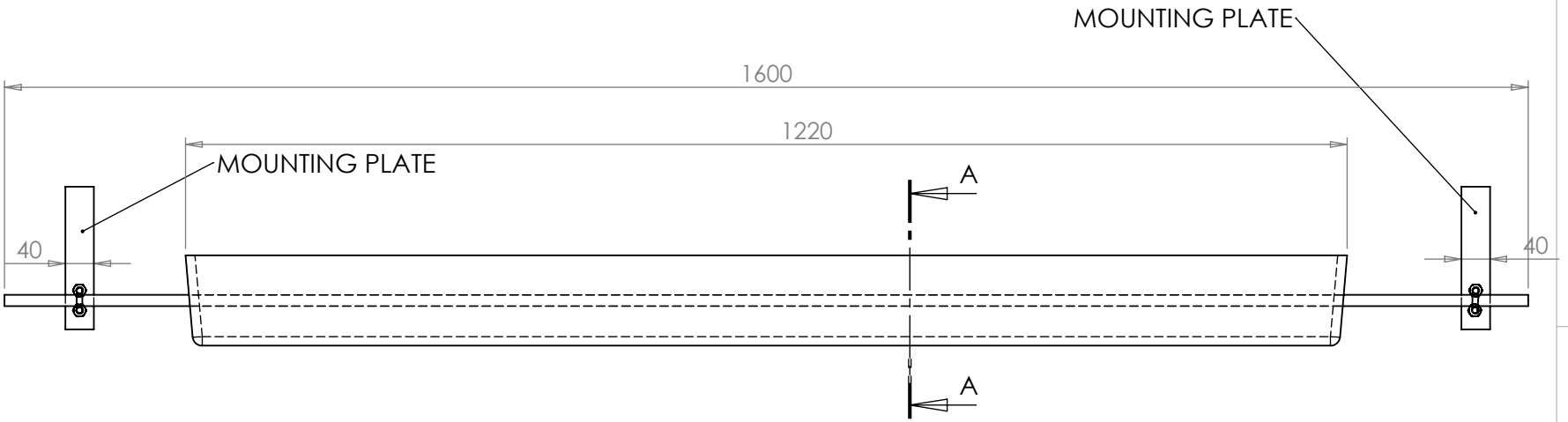

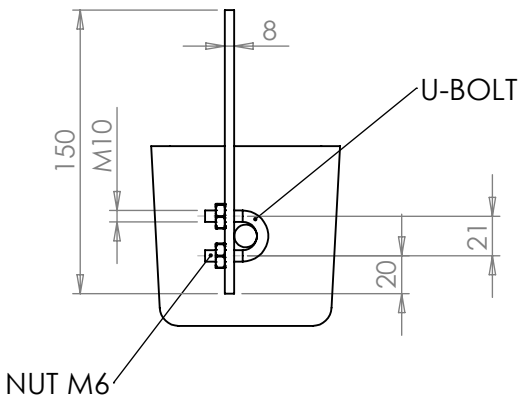

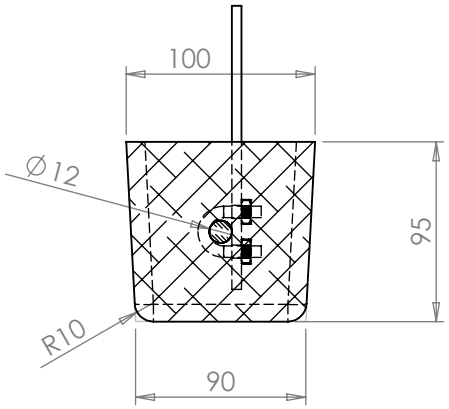

SECTION A-A
SCALE 1 : 4

NOTES:

1. Net Weight: 29.30Kg
2. Gross Weight: 30.70 Kg
3. Insert Weight: 1.40 Kg

4. Insert quality:
   Plate, bar sections: EN10025 grade S235 or S275

5. Insert Welding
   All fabrication of steel insert are according EN 10287 and EN 10288

6. Insert surface preparation
   For alluminium anodes minimum quality ISO 8501-1 SA2 1/2

7. All dimensions are in mm

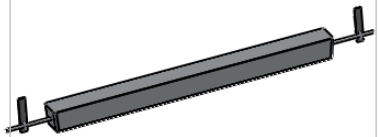

No	DATE	REVISION	REV	CHK	APPR

ANOTEC bvba
Brusselsestraat 49
1750 Lennik , Belgium

DRAWING NAME:

ANODE GENERAL DESCRIPTION

ANODE TYPE:

AT293-SC

anotec
SACRIFICIAL ANODES

DESIGNED	P.P	BELONGS	E. P. E.
STUDIED		PAGE	1/1
APPROVED		SCALE	1:5.5
DRAWING NUMBER		DATE	8-4-2015
		CODE	